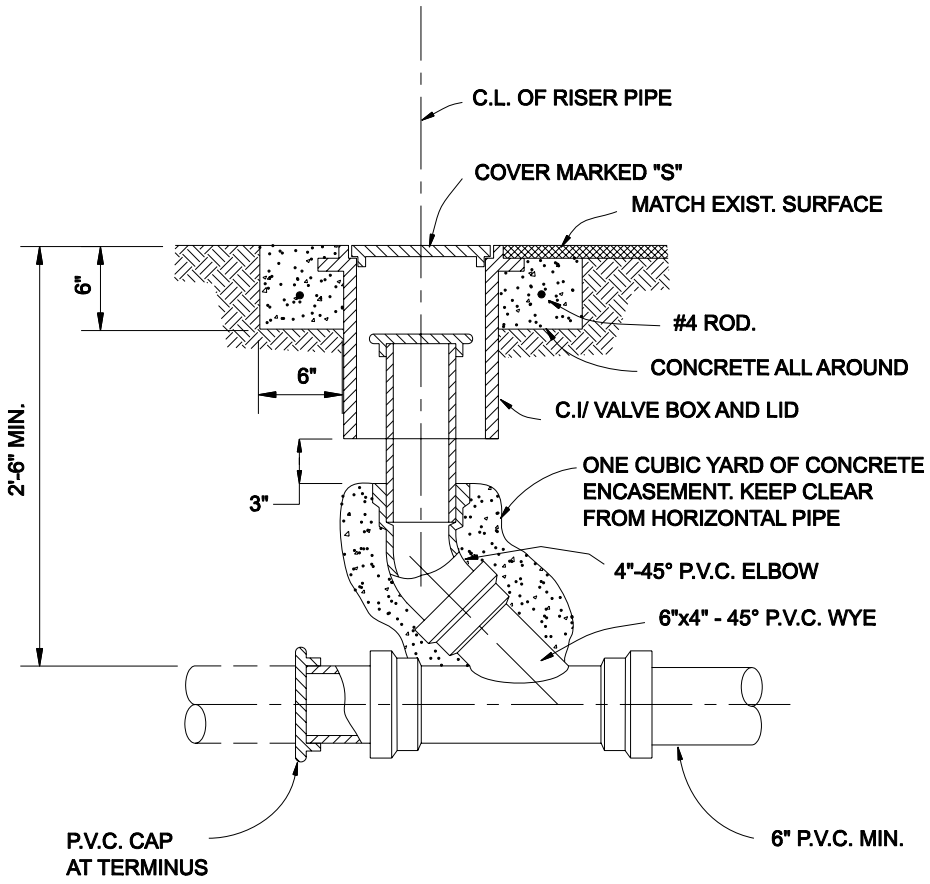

LBFH INC. - CADD FILE NAME: L:/CAD-DETAILS/SLC/SLC-WW1.DWG

ST. LUCIE COUNTY
WATER & WASTEWATER
CONSTRUCTION STANDARDS

SEWER SERVICE CLEANOUT
(POSSIBLE TRAFFIC AREA)

DRAWING NUMBER: WW-1

...\SLC-WW1.dwg 1/18/2007 4:52:28 PM