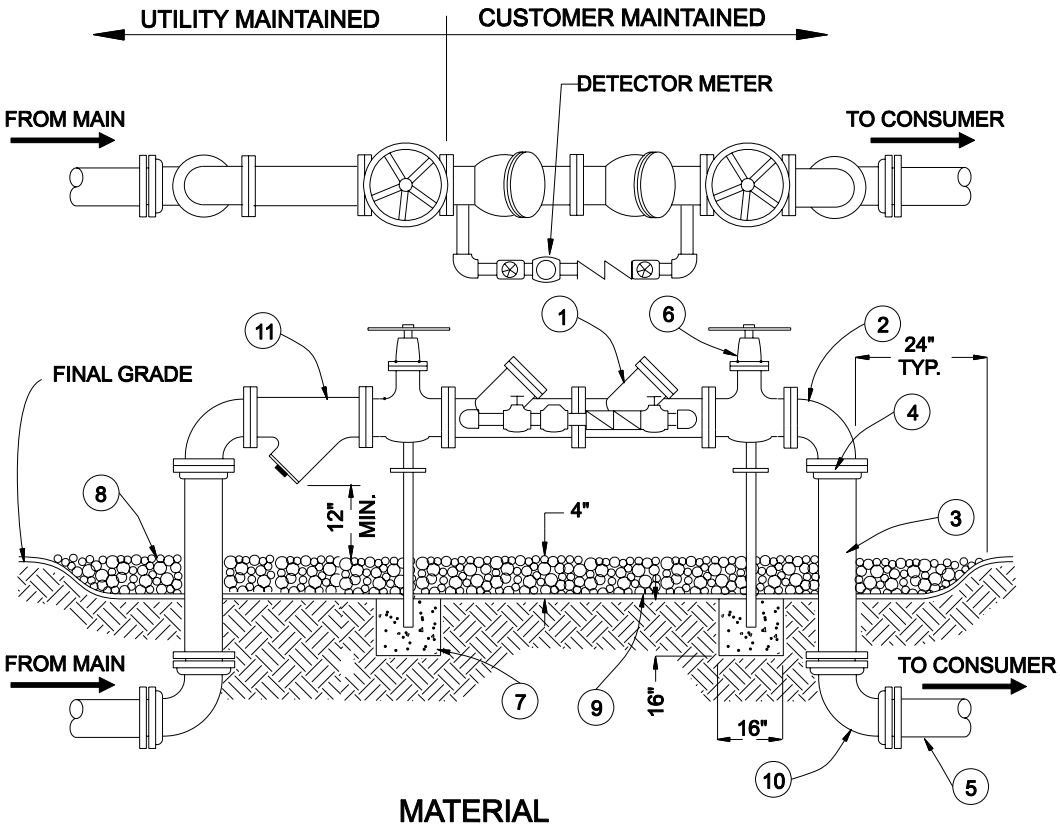

MATERIAL

ITEM	QUANT.	DESCRIPTION	
1	1	4", 6", 8"	VALVE, D.C. BACKFLOW PREVENTER
2	2	4", 6", 8"	BEND - 90 (FLG-FLG)
3		4", 6", 8"	PIPE, DUCTILE IRON
4	2	4", 6", 8"	ADAPTER, FLANGE, D.I.P.
5	2	4", 6", 8"	PIPE, P.V.C. (DR-18)
6	2	4", 6", 8"	GATE VALVE, C.I., (FLG-FLG)(R.S. OS&Y)
7	2	2"	IRON PIPE / CONCRETE FOUNDATION
8			PEA GRAVEL
9			FILTER FABRIC
10	2		BEND - 90 (MJ-MJ)
11	1	4", 6", 8"	WYE STRAINER

NOTES:

1. FIELD ADJUST AND CUT ITEM 3 TO PROPER LENGTH. THIS TYPE OF CONSTRUCTION IS DESIGNED FOR LIMITED WORKING AREA.
2. ALL PIPE AND FITTINGS SHALL BE DUCTILE IRON.
3. ALL UNDERGROUND FITTINGS SHALL BE RESTRAINED MECHANICAL JOINT TYPE & ALL ABOVE GROUND FITTINGS SHALL BE FLANGE JOINTS WITH FULL FACE NEOPRENE GASKETS, WITH STAINLESS STEEL BOLTS.
4. PROVIDE CHAINS & LOCKS FOR THE VALVES AS REQUIRED BY S.L.C.U. OR THE AUTHORITY HAVING JURISDICTION.
5. THE ENGINEER OF RECORD SHALL SIZE MAIN AND BACKFLOW, TAKING INTO CONSIDERATION THE TYPICAL HEAD LOSS FOR THE BACKFLOW AND A MINIMUM SUPPLY PRESSURE OF 20 psi.

LBFH INC. - CADD FILE NAME: L:/CAD-DETAILS/SLC/SLC-W12.DWG

ST. LUCIE COUNTY FLORIDA

ST. LUCIE COUNTY
WATER & WASTEWATER
CONSTRUCTION STANDARDS

FIRE SERVICE
DOUBLE DETECTOR
CHECK VALVE

DRAWING NUMBER: W-12