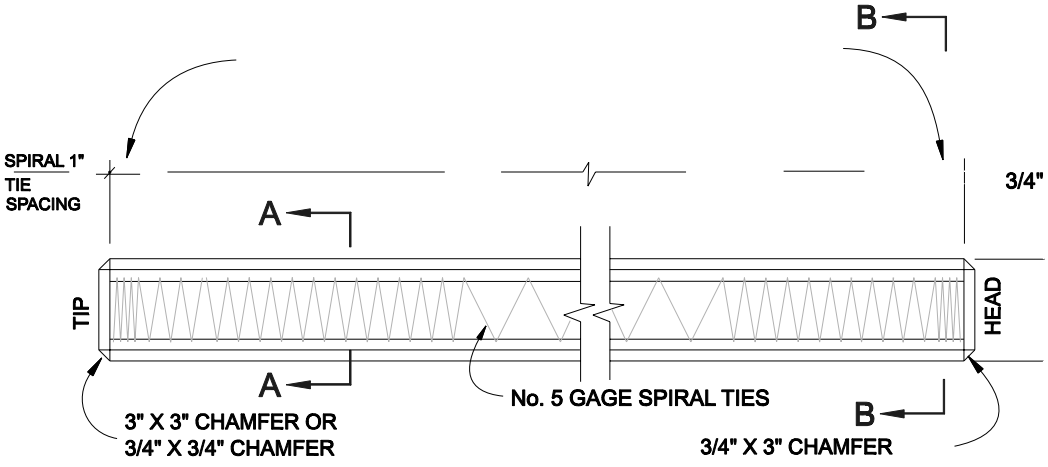

ELEVATION OF 12" X 12" PILE

MAXIMUM LENGTH - 50' SINGLE POINT PICK-UP
MAXIMUM LENGTH - 70' DOUBLE POINT PICK-UP
OVER 70' TRIPLE POINT PICK-UP SEE F.D.O.T
STD. DRAWINGS INDEX No. 600

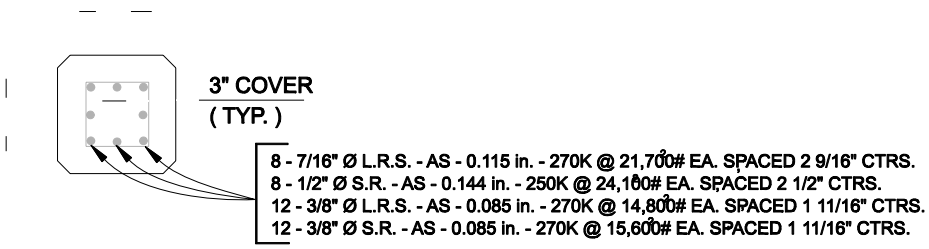

SECTION "A-A"

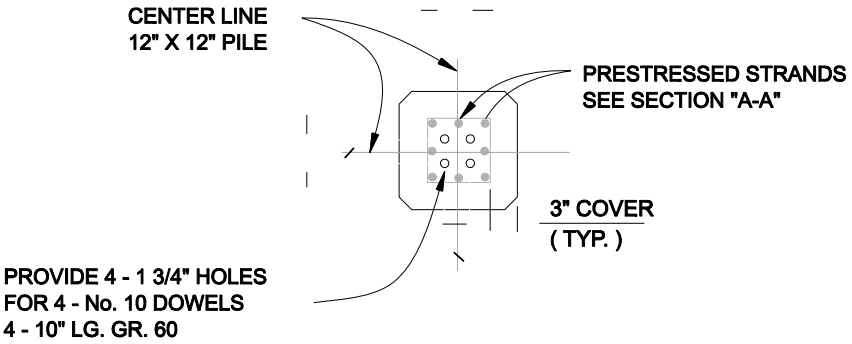

SECTION "B-B"

LBFH INC. - CADD FILE NAME: L:/CAD-DETAILS/SLC/SLC-G17.DWG

ST. LUCIE COUNTY
WATER & WASTEWATER
CONSTRUCTION STANDARDS

CONCRETE PILE DETAIL

DRAWING NUMBER: G-17