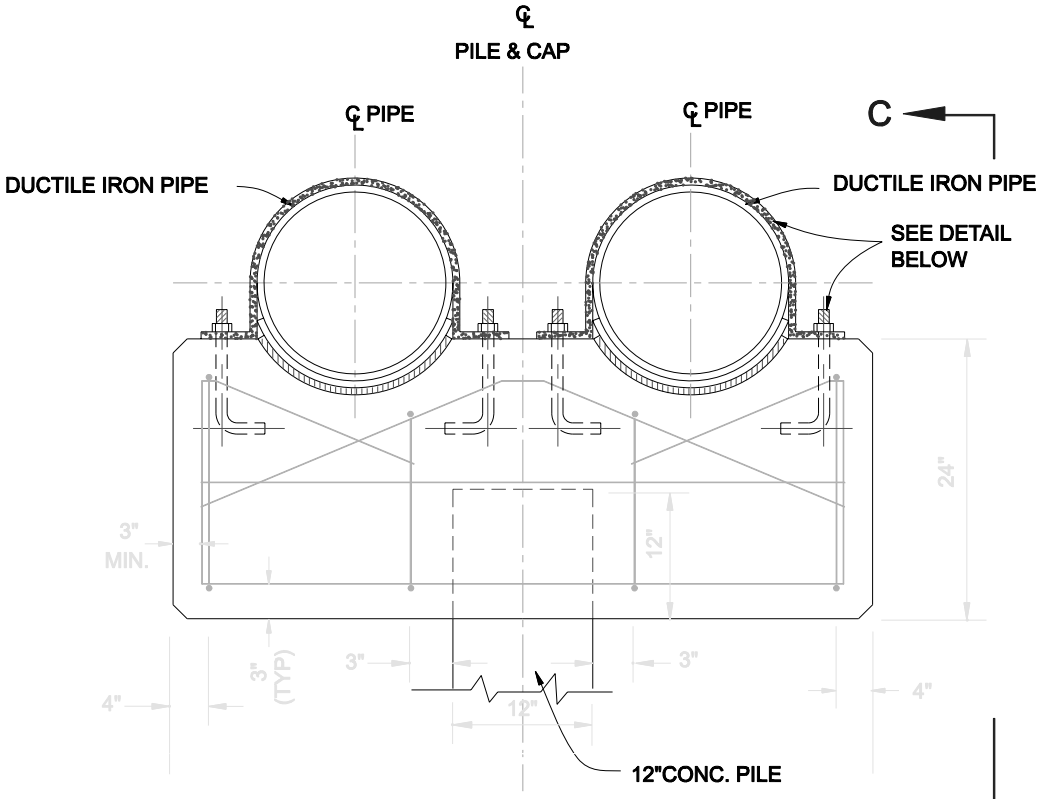

ELEVATION

NOTE: ALL REINF. STEEL SHALL BE GRADE 60 No. 4 BARS

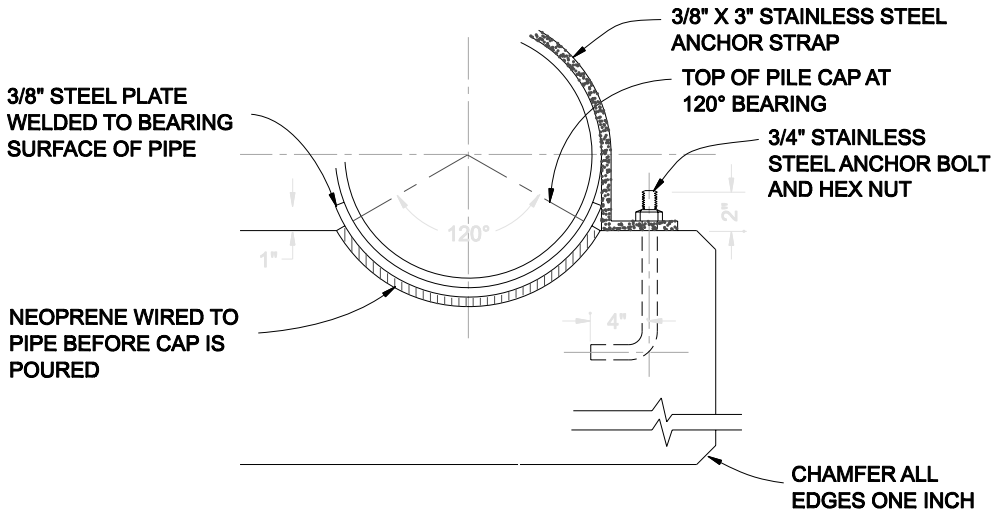

DETAIL

LBFH INC. - CADD FILE NAME: L:/CAD-DETAILS/SLC/SLC-G15.DWG

	ST. LUCIE COUNTY WATER & WASTEWATER CONSTRUCTION STANDARDS	PILE CAP SUPPORT DETAIL (DUAL PIPE)
		DRAWING NUMBER: G-15