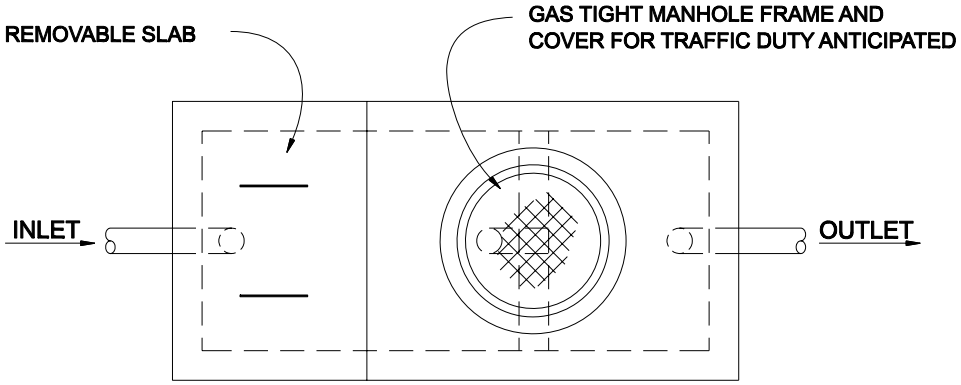

TOP VIEW

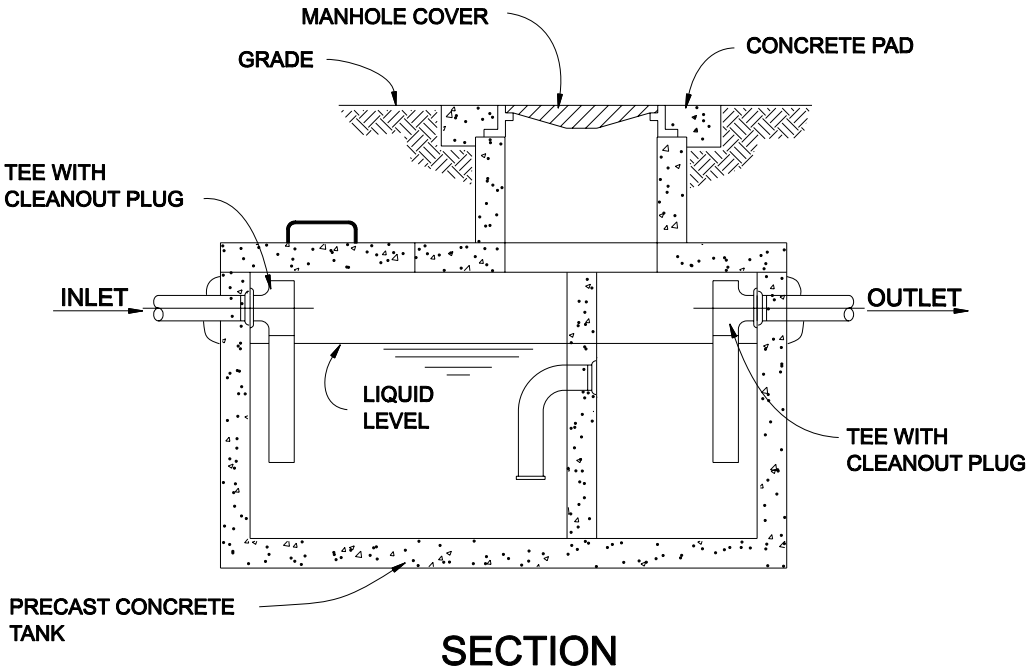

SECTION

LBFH INC. - CADD FILE NAME: L:/CAD-DETAILS/SLC/SLC-WW31.DWG

	ST. LUCIE COUNTY WATER & WASTEWATER CONSTRUCTION STANDARDS	DOUBLE-COMPARTMENT GREASE TRAP AND OIL SEPARATOR DRAWING NUMBER: WW-31